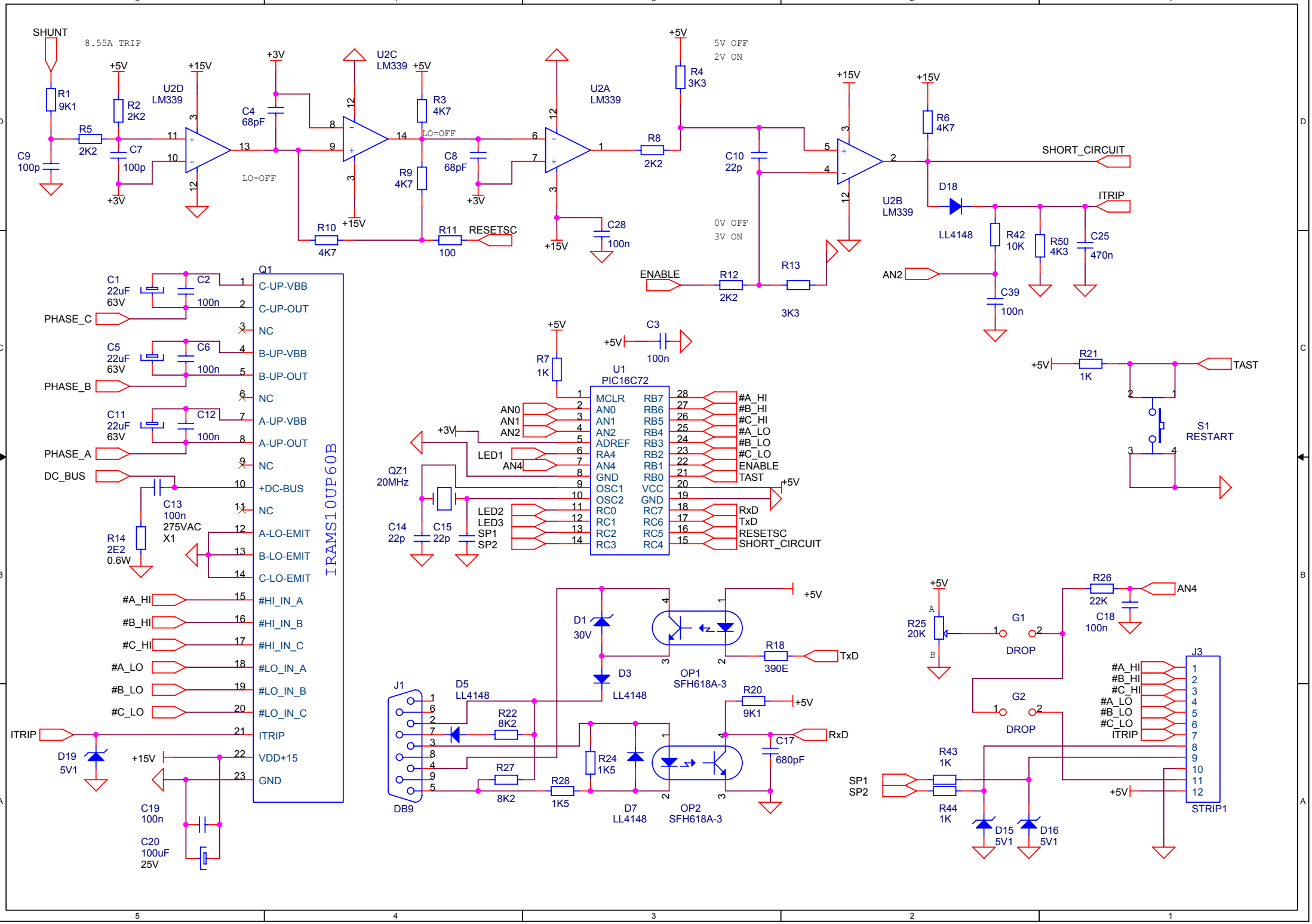
SHUNT
8.55A TRIP
R1 9K1
R2 2K2
R5 2K2
C9 100p
C7 100p
U2D LM339
C4 68pF
LO=OFF
U2C LM339
R3 4K7
R9 4K7
C8 68pF
R10 4K7
R11 100
RESETSC
U2A LM339
C28 100n
R4 3K3
5V OFF
2V ON
R8 2K2
C10 22p
0V OFF
3V ON
R12 2K2
R13 3K3
ENABLE
U2B LM339
R6 4K7
SHORT_CIRCUIT
D18 LL4148
ITRIP
R42 10K
R50 4K3
C25 470n
AN2
C39 100n
Q1
IRAMS10UP60B
C-UP-VBB
C-UP-OUT
NC
B-UP-VBB
B-UP-OUT
A-UP-VBB
A-UP-OUT
+DC-BUS
A-LO-EMIT
B-LO-EMIT
C-LO-EMIT
#HI_IN_A
#HI_IN_B
#HI_IN_C
#LO_IN_A
#LO_IN_B
#LO_IN_C
VDD+15
GND
PHASE_C
PHASE_B
PHASE_A
DC_BUS
C1 22uF 63V
C2 100n
C5 22uF 63V
C6 100n
C11 22uF 63V
C12 100n
C13 100n 275VAC X1
R14 2E2 0.6W
#A_HI
#B_HI
#C_HI
#A_LO
#B_LO
#C_LO
D19 5V1
C19 100n
C20 100uF 25V
U1 PIC16C72
MCLR
AN0
AN1
AN2
ADREF
RA4
AN4
GND
OSC1
OSC2
RC0
RC1
RC2
RC3
RB7
RB6
RB5
RB4
RB3
RB2
RB1
RB0
VCC
GND
RC7
RC6
RC5
RC4
LED1
LED2
LED3
SP1
SP2
QZ1 20MHz
C14 22p
C15 22p
R7 1K
C3 100n
RxD
TxD
TAST
R21 1K
S1 RESTART
D1 30V
D3 LL4148
OP1 SFH618A-3
R18 390E
J1
DB9
D5 LL4148
R22 8K2
R27 8K2
R28 1K5
R24 1K5
D7 LL4148
OP2 SFH618A-3
R20 9K1
C17 680pF
R25 20K
G1 DROP
G2 DROP
R26 22K
C18 100n
R43 1K
R44 1K
D15 5V1
D16 5V1
J3
STRIP1

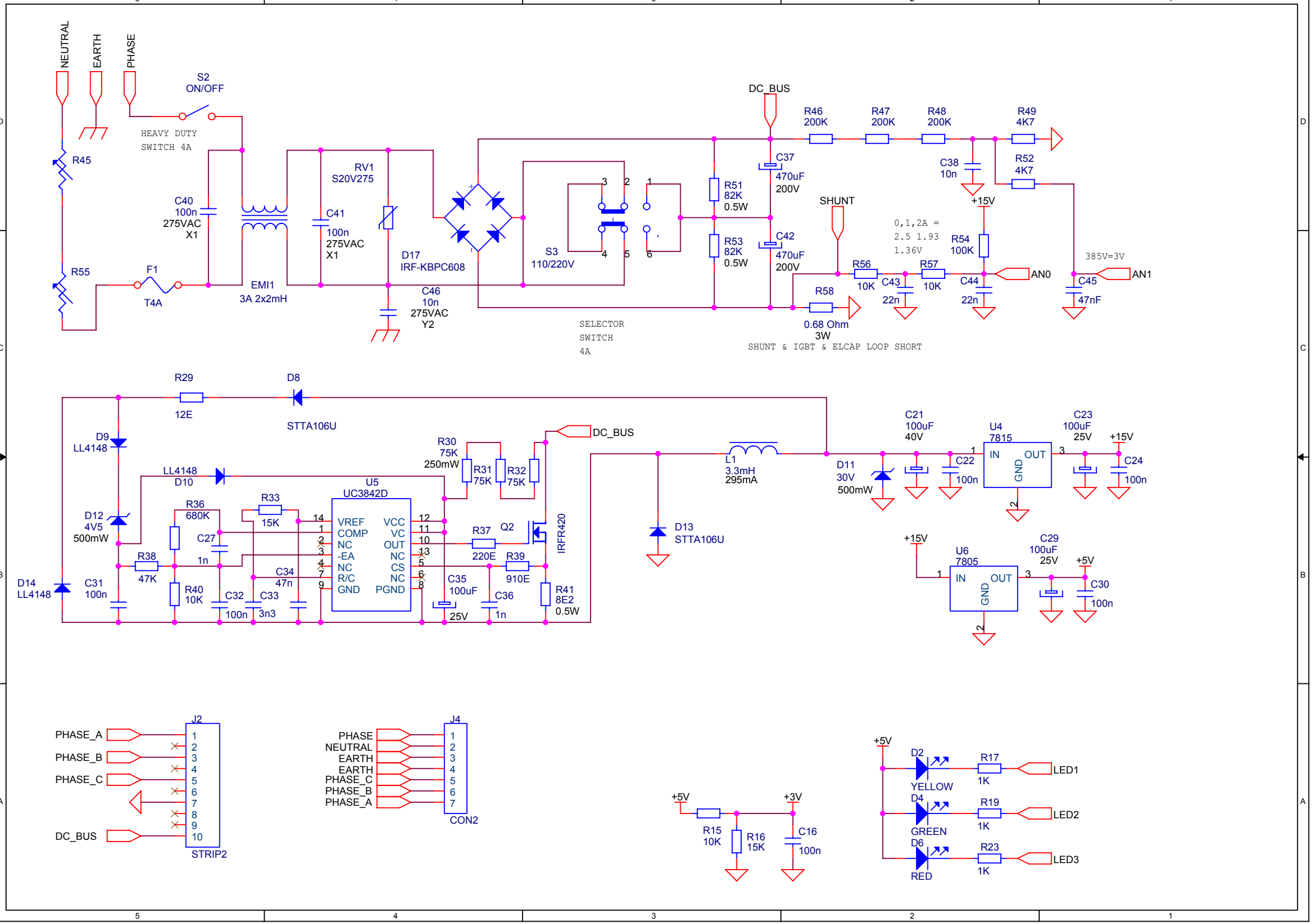
NEUTRAL
EARTH
PHASE
S2
ON/OFF
HEAVY DUTY
SWITCH 4A
R45
R55
F1
T4A
C40
100n
275VAC
X1
EMI1
3A 2x2mH
C41
100n
275VAC
X1
RV1
S20V275
D17
IRF-KBPC608
C46
10n
275VAC
Y2
S3
110/220V
SELECTOR
SWITCH
4A
DC_BUS
R51
82K
0.5W
R53
82K
0.5W
C37
470uF
200V
C42
470uF
200V
SHUNT
R46
200K
R47
200K
R48
200K
R49
4K7
R52
4K7
C38
10n
+15V
0,1,2A =
2.5 1.93
1.36V
R54
100K
R56
10K
R57
10K
C43
22n
C44
22n
R58
0.68 Ohm
3W
SHUNT & IGBT & ELCAP LOOP SHORT
AN0
385V=3V
C45
47nF
AN1
R29
12E
D8
STTA106U
D9
LL4148
LL4148
D10
D12
4V5
500mW
D14
LL4148
R38
47K
C31
100n
R36
680K
R40
10K
C27
1n
R33
15K
C32
100n
C33
3n3
C34
47n
U5
UC3842D
VREF
COMP
NC
-EA
NC
R/C
GND
VCC
VC
OUT
NC
CS
NC
PGND
R30
75K
250mW
R31
75K
R32
75K
R37
220E
Q2
IRFR420
R39
910E
C35
100uF
25V
C36
1n
R41
8E2
0.5W
DC_BUS
D13
STTA106U
L1
3.3mH
295mA
D11
30V
500mW
C21
100uF
40V
C22
100n
U4
7815
IN
OUT
GND
C23
100uF
25V
+15V
C24
100n
+15V
U6
7805
IN
OUT
GND
C29
100uF
25V
+5V
C30
100n
J2
PHASE_A
PHASE_B
PHASE_C
DC_BUS
STRIP2
J4
PHASE
NEUTRAL
EARTH
EARTH
PHASE_C
PHASE_B
PHASE_A
CON2
+5V
R15
10K
R16
15K
+3V
C16
100n
+5V
D2
YELLOW
R17
1K
LED1
D4
GREEN
R19
1K
LED2
D6
RED
R23
1K
LED3